MAKING MODERN LIVING POSSIBLE

Technical Information

H1 Axial Piston Pump
Size 210/250, Single

powersolutions.danfoss.com

Revision History

Table of Revisions

Date	Changed	Rev
Mar 2014	Converted to Danfoss layout - DITA CMS	BA
Aug 2013	First edition	AA

Contents

Technical specifications

Technical specifications

For definitions of the following specifications, see Basic Information 11062168, Operating parameters.

H1P general specifications

Design	Axial piston pump of cradle swashplate design with variable displacement
Direction of rotation	Clockwise, counterclockwise
Pipe connections	Main pressure ports: ISO split flange boss Remaining ports: SAE straight thread O-ring boss
Recommended installation position	Pump installation position is discretionary, however the recommended control position is on the top or at the side, with the top position preferred. If the pump is installed with the control at the bottom, flushing flow must be provided through port M14 located on the EDC, FNR and NFPE control. Vertical input shaft installation is acceptable. If input shaft is at the top 1 bar case pressure must be maintained during operation. The housing must always be filled with hydraulic fluid. Recommended mounting for a multiple pump stack is to arrange the highest power flow towards the input source. Consult Danfoss for nonconformance to these guidelines.
Auxiliary cavity pressure	Will be inlet pressure with internal charge pump. For reference see operating parameter on next page. Will be case pressure with external charge supply. Please verify mating pump shaft seal capability.

Technical data H1P 210/250

Feature	Unit	Size 210	Size 250
Displacement*	cm^3 [in^3]	211.5 [12.91]	251.7 [15.36]
Flow at rated (continuous) speed*	l/min [US gal/min]	549 [120.7]	654 [143.9]
Torque at maximum displacement (theoretical)*	N•m/bar [lbf•in/1000psi]	3.34 [2042]	3.98 [2433]
Mass moment of inertia of rotating components	kg•m^2 [slug•ft^2]	0.0116 [0.0199]	
Mass [weight] dry (without charge pump or auxiliary mounting flange)	kg [lb]	163.0 [359.4]	
Oil volume	liter [US gal]	7.2 [1.9]	
Mounting flange	ISO 3019-1 flange 177-4 (SAE E)		
Input shaft outer diameter, splines and tapered shafts	ISO 3019-1, outer dia 44 mm - 4 (SAE D, 13 teeth) ISO 3019-1, outer dia 44 mm - 4 (SAE D, 27 teeth) ISO 3019-1, outer dia 57 mm - 4 (SAE E, 17 teeth)		
Auxiliary mounting flange with metric fasteners, shaft outer diameter and splines	ISO 3019-1, flange 82 - 2, outer dia 16 mm - 4 (SAE A, 9 teeth) ISO 3019-1, flange 82 - 2, outer dia 19 mm - 4 (SAE A, 11 teeth) ISO 3019-1, flange 101 - 2, outer dia 22 mm - 4 (SAE B, 13 teeth) ISO 3019-1, flange 101 - 2, outer dia 25 mm - 4 (SAE B-B, 15 teeth) ISO 3019-1, flange 127 - 4, outer dia 32 mm - 4 (SAE C, 14 teeth) ISO 3019-1, flange 152 - 4, outer dia 44 mm - 4 (SAE D, 13 teeth) ISO 3019-1, flange 177 - 4, outer dia 44 mm - 4 (SAE E, 13 teeth) ISO 3019-1, flange 177 - 4, outer dia 44 mm - 4 (SAE E, 27 teeth)		
Suction port	∅38 - 350 bar split flange boss per ISO 6162, M12x1.75		
Main port configuration	∅38 - 450 bar split flange boss per ISO 6162, M16x2		
Case drain ports L2, L4 (SAE O-ring boss)	Port ISO 11926-1 – 1 5/16 -12 (SAE O-ring boss)		
Other ports	SAE O-ring boss. See installation drawings at the back of this manual.		
Customer interface threads	Metric fasteners		

Technical specifications

Operating parameters H1P 210/250

Feature		Unit	Size 210	Size 250
Input speed	Minimum for *internal* charge supply at minimum charge pressure. Performance (pressure and displacement) may be limited due to limited control pressure	min^{-1} (rpm)	500	
	Minimum for *external* charge supply at minimum charge pressure. Full performance (pressure and displacement) possible at minimum charge and control pressure supply		500	
	Minimum for full performance (pressure and displacement) for *internal* charge supply at minimum charge and control pressure		1200	
	Rated		2600	
	Maximum		2800	
System pressure	Maximum working pressure	bar [psi]	450 [6528]	
	Maximum pressure		480 [6960]	
	Maximum low loop		45 [650]	
	Minimum low loop pressure		10 [145]	
Charge pressure	Minimum	bar [psi]	18 [261]	
	Maximum		60 [870]	
Control pressure	Minimum (at corner power for EDC)	bar [psi]	16 [232]	
	Maximum		40 [580]	
Charge pump inlet pressure	Rated	bar (absolute) [in Hg vacuum]	0.7 [9]	
	Minimum (cold start)		0.2 [24]	
	Maximum	bar [psi]	4.0 [58]	
Case pressure	Rated	bar [psi]	3.0 [44]	
	Maximum		5.0 [73]	
Lip seal external pressure	Maximum	bar [psi]	0.4 [5.8]	

H1P fluid specifications

Feature		Unit	
Viscosity	Intermittent [1]	mm^2/s [SUS]	5 [42]
	Minimum		7 [49]
	Recommended range		12-80 [66-370]
	Maximum		1600 [7500]
Temperature range [2]	Minimum (cold start) [3]	°C [°F]	-40 [-40]
	Recommended range		60-85 [140-185]
	Rated		104 [220]
	Maximum intermittent [1]		115 [240]
Filtration (recommended minimum)	Cleanliness per ISO 4406		22/18/13
	Efficiency (charge pressure filtration)	β-ratio	$\beta_{15-20} = 75$ ($\beta_{10} \geq 10$)
	Efficiency (suction and return line filtration)		$\beta_{35-45} = 75$ ($\beta_{10} \geq 2$)
	Recommended inlet screen mesh size	µm	100 – 125

[1] Intermittent = Short term t < 1min per incident and not exceeding 2 % of duty cycle based load-life
[2] At the hottest point, normally case drain port
[3] Cold start = Short term t < 3min, p ≤ 50 bar [725 psi], n ≤ 1000 min^{-1}(rpm)

General technical specifications

Shaft loads

External radial shaft loads

H1 pumps are designed with bearings that can accept some external radial loads.

The external radial shaft load limits are a function of the load position and orientation, and the operating conditions of the unit. External radial shaft loads impact lifetime.

For lifetime calculations please contact Danfoss representative.

The *maximum allowable radial load* (R_e) is based on the maximum external moment (M_e) and the distance (L) from the mounting flange to the load. It may be determined using the following table and formula.

$R_e = M_e / L$

Radial load position

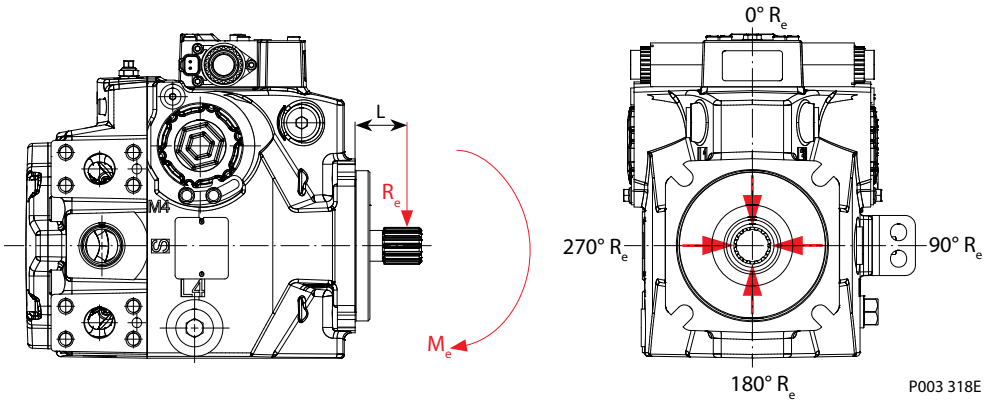

M_e = Shaft moment

L = Flange distance

R_e = External force to the shaft

Thrust loads should be avoided. Contact factory in the event thrust loads are anticipated.

Bearing life H1P 210/250

Maximum external shaft load based on shaft deflection

	Unit	Size 210	Size 250
External radial moment – M_e	Nm [lbf•in]	150 [1328]	167 [1478]

All external shaft loads affect bearing life. In applications with external shaft loads, minimize the impact by positioning the load at 0° or 180° as shown in the figure.

Danfoss recommends clamp-type couplings for applications with radial shaft loads.

Contact your Danfoss representative for an evaluation of unit bearing life if you have continuously applied external loads exceeding 25 % of the maximum allowable radial load (R_e) or the pump swashplate is positioned on one side of center all or most of the time.

General technical specifications

Mounting flange loads H1P 210/250

H1 single pump front flange load

The moments shown below apply for control orientation top or side (see table and figures).

Mounting flange load

	Unit	Size 210/250
Rated moment – M_R	Nm [lbf•in]	6176 [54 662]
Shock load moment – M_S		13 003 [115 086]

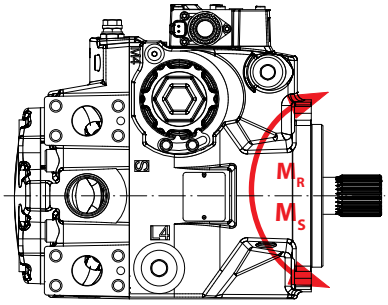

P001 916

For calculation details refer to *H1 Pump Basic Information Manual 11062168*, section Mounting Flange Loads.

Model code

Model code H1P 210/250

		A	B	D	F	E	G	H	J	K	M	N	S	T	V	W	X	Y
H1 P			C					G										

Displacement

210	211.5 cm^3 [12.91 in^3]
250	251.7 cm^3 [15.36 in^3]

A - Rotation

L	Left hand (counter clockwise)
R	Right hand (clockwise)

B - Product version

A	Revision code

D - Control

A2	Electric Displacement Control (EDC) 12V, Deutsch connector
A3	Electric Displacement Control (EDC) 24V, Deutsch connector
A4	Electric Displacement Control (EDC) 12V, Deutsch connector, Manual override
A5	Electric Displacement Control (EDC) 24V, Deutsch connector, Manual override

F - Orifices

C1	Orifices, 0.8 mm in servo supply 1 and 2, recommended for propel applications
C2	Orifices, 1.3 mm in servo supply 1 and 2 (Standard), recommended for propel applications
C3	No orifice, recommended for non-propel applications

E - Displacement limiters

N	None
B	Adjustable externally (align with option Y: Settings for adjustment, if applicable)

G - Endcap options

	Twin port, ISO 6162 Split flange ports	
Match with below options (K)	Auxiliary mounting pad None, ISO 3019-1, flange 82 - 2 (SAE A, 9 and 11 teeth) ISO 3019-1, flange 101 - 2 (SAE B, 13 teeth) ISO 3019-1, flange 101 - 2 (SAE B-B, 15 teeth) ISO 3019-1, flange 127 - 4 (SAE C, 14 teeth) ISO 3019-1, flange 152 - 4 (SAE D, 13 teeth) ISO 3019-1, flange 152 - 4 (SAE E, 13 and 27 teeth)	
Match with below options (T)	Suction filtration	Remote and external charge supply for full charge flow filtration
D6	X	
D8		X

Model code

	A	B	D	F	E	G	H	J	K	M	N	S	T	V	W	X	Y
H1 P		C					G										

H - Mounting

C	ISO 3019-1, flange 152 - 4 (SAE E 4 bolt)

J - Input shaft

G3	ISO 3019-1, outer dia 44 mm - 4 (SAE E, 13 teeth splined shaft 8/16 pitch)
G2	ISO 3019-1, outer dia 44 mm - 4 (SAE E, 27 teeth splined shaft 16/32 pitch)
F8	ISO 3019-1, outer dia 57 mm - 4 (SAE E, 17 teeth splined shaft 8/16 pitch)

K - Auxiliary mounting pad (align with option G: Endcap selection)

NN	None	
H2	ISO 3019-1, flange 82 - 2, outer dia 16 mm - 4 (SAE A, 9 teeth 16/32 coupling)	Shipping cover
H1	ISO 3019-1, flange 82 - 2, outer dia 19 mm - 4 (SAE A, 11 teeth 16/32 coupling)	
H3	ISO 3019-1, flange 101 - 2, outer dia 22 mm - 4 (SAE B, 13 teeth 16/32 coupling)	
H5	ISO 3019-1, flange 101 - 2, outer dia 25 mm - 4 (SAE B-B, 15 teeth 16/32 coupling)	
H6	ISO 3019-1, flange 127 - 4, outer dia 32 mm - 4 (SAE C, 14 teeth 12/24 coupling)	
H4	ISO 3019-1, flange 152 - 4, outer dia 44 mm - 4 (SAE D, 13 teeth 8/16 coupling)	
E1	ISO 3019-1, flange 177 - 4, outer dia 44 mm - 4 (SAE E, 13 teeth 8/16 coupling)	

M - Overpressure protection type and setting side "A" **

N - Overpressure protection type and setting side "B" **

L	High pressure relief valve with bypass and pressure limiters	
	K	High pressure relief valve only with bypass (no pressure limiters)
L20	K20	200 bar [2900 psi]
L23	K23	230 bar [3336 psi]
L25	K25	250 bar [3630 psi]
L28	K28	280 bar [4061 psi]
L30	K30	300 bar [4350 psi]
L33	K33	330 bar [4786 psi]
L35	K35	350 bar [5080 psi]
L38	K38	380 bar [5510 psi]
L40	K40	400 bar [5800 psi]
L42	K42	420 bar [6090 psi]
L43	—	430 bar [6237 psi]
L44	—	440 bar [6382 psi]
L45	K45	450 bar [6960 psi]
Contact factory for pressures not shown or for applied pressure above maximum working pressure (see System Pressure page 5)		

Model code

				A	B	D		F	E	G	H	J	K	M	N	S	T	V	W	X	Y
H1 P					C						G										

S - Charge pump

R	52 cm^3/rev [3.17 in^3/rev]
W	60 cm^3/rev [3.66 in^3/rev]
N	No charge pump, external charge supply, (align with Option T: Filtration Options, option E)

T - Filtration options (align with option G: Endcap selection)

L	Suction filtration (see Basic drawings)
P	Remote full charge flow filtration (see endcap drawings)
E	External charge flow filtration (see endcap drawings), (align with option S: Charge pump, option N)

V - Charge pressure relief setting (contact factory for pressure not shown)

20	20 bar [290 psi]
24	24 bar [348 psi]
30	30 bar [435 psi]

W - Special hardware features

PN	None

X - Paint and nametag

NNN	Black paint and Danfoss nametag

Y - Special settings

NNN	None

Control options

Electrical Displacement Control (EDC) options A2 (12 V)/A3 (24 V)

EDC principle

The Electrical Displacement Control (EDC) consists of a pair of proportional solenoids on each side of a three-position, four-way porting spool. The proportional solenoid applies a force input to the spool, which ports hydraulic pressure to either side of a double acting servo piston. Differential pressure across the servo piston rotates the swashplate, changing the pump's displacement from full displacement in one direction to full displacement in the opposite direction.

Under some circumstances, such as contamination, the control spool could stick and cause the pump to stay at some displacement.

A serviceable 125 µm screen is located in the supply line immediately before the control porting spool.

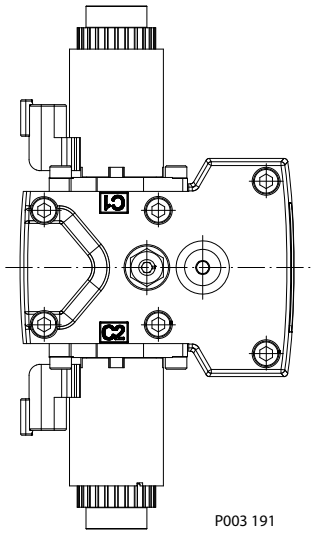

Pump displacement vs. control current

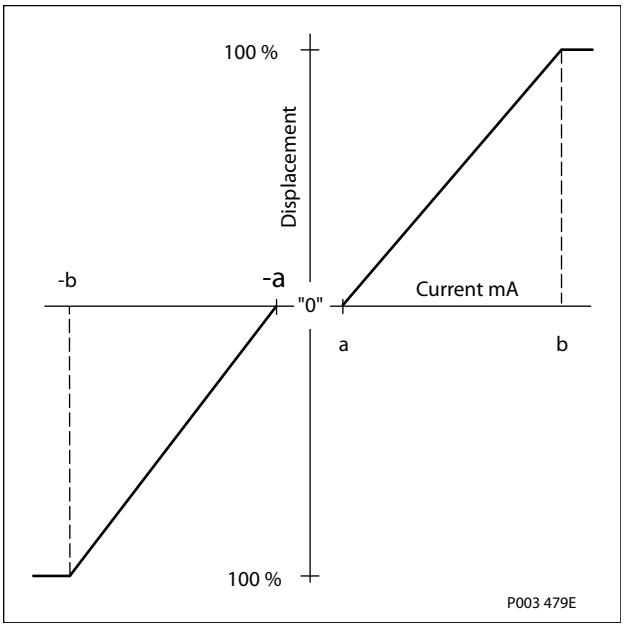

Control options

EDC-schematic diagram

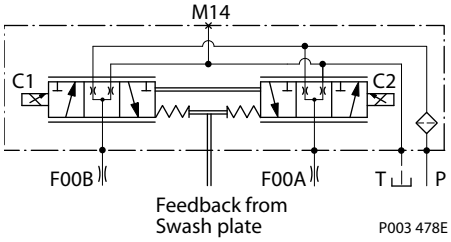

Control signal requirements

Control current

Voltage	a* mA	b mA	Pin connections
12 V	640	1640	any order
24 V	330	820	

* Factory test current, for vehicle movement or application actuation expect higher or lower value.

Connector

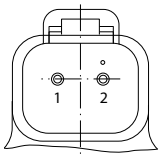

P003 480

Description	Quantity	Ordering number
Mating connector	1	Deutsch® DT06-2S
Wedge lock	1	Deutsch® W2S
Socket contact (16 and 18 AWG)	2	Deutsch® 0462-201-16141
Danfoss mating connector kit	1	K29657

Solenoid data

Voltage	12V	24V
Maximum current	1800 mA	920 mA
Coil resistance @ 20 °C [70 °F]	3.66 Ω	14.20 Ω
Coil resistance @ 80 °C [176 °F]	4.52 Ω	17.52 Ω
PWM Range	70-200 Hz	
PWM Frequency (preferred)*	100 Hz	
Inductance	33 mH	140 mH
IP Rating (IEC 60 529) + DIN 40 050, part 9	IP 67	
IP Rating (IEC 60 529) + DIN 40 050, part 9 with mating connector	IP 69K	
* PWM signal required for optimum control performance.		

Control options

Flow table

Shaft rotation	CW		CCW	
Coil energized*	**C2**	**C1**	**C2**	**C1**
Port A	in	out	out	in
Port B	out	in	in	out
Servo port pressurized	M5	M4	M5	M4
* For coil location see installation drawings.				

Control response

H1 controls are available with optional control passage orifices to assist in matching the rate of swashplate response to the application requirements (e.g. in the event of electrical failure). Software ramp or rate limiting should be used to control vehicle response in normal operation. The time required for the pump output flow to change from zero to full flow (acceleration) or full flow to zero (deceleration) is a net function of spool porting, orifices, and charge pressure. A swashplate response table is available for each frame indicating available swashplate response times. Testing should be conducted to verify the proper software and orifice selection for the desired response.

H1 pumps are limited in mechanical orificing combinations. Software is envisioned as the means to control the swashplate response in normal operating conditions. Mechanical servo orifices are to be used only for fail-safe return to neutral in the event of an electrical failure.

Typical response times shown below at the following conditions:

Δp	= 250 bar	[3626 psi]
Viscosity and temperature	= 30 mm^2/s (50 °C)	[141 SUS (122 °F)]
Charge pressure	= 20 bar	[290 psi]
Speed	= 1800 min^{-1} (rpm)	

Response time

Stroking direction	0.8 mm [0.03 in] Orifice	1.3 mm [0.05 in] Orifice	No orifice
Neutral to full flow	7.4 s	3.5 s	2.1 s
Full flow to neutral	5.0 s	2.4 s	1.4 s

Manual Over Ride (MOR)

All controls are available with a Manual Over Ride (MOR) either standard or as an option for temporary actuation of the control to aid in diagnostics.

Forward-Neutral-Reverse (FNR) and Non Feedback Proportional Electric (NFPE) controls are always supplied with MOR functionality.

Unintended MOR operation will cause the pump to go into stroke. The vehicle or device must always be in a „safe“ condition (i.e. vehicle lifted off the ground) when using the MOR function. The MOR plunger has a 4 mm diameter and must be manually depressed to be engaged. Depressing the plunger mechanically moves the control spool which allows the pump to go on stroke. The MOR should be engaged anticipating a full stroke response from the pump.

Control options

Warning

An o-ring seal is used to seal the MOR plunger where initial actuation of the function will require a force of 45 N to engage the plunger. Additional actuations typically require less force to engage the MOR plunger. Proportional control of the pump using the MOR should not be expected.

Refer to control flowtable for the relationship of solenoid to direction of flow.

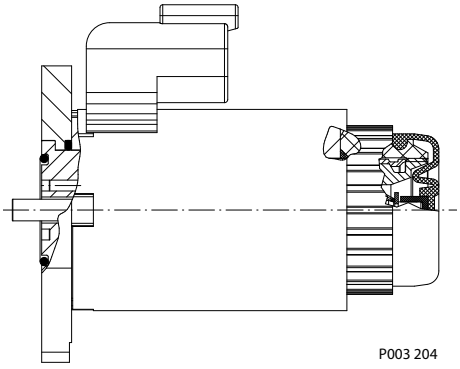

MOR-schematic diagram (EDC shown)

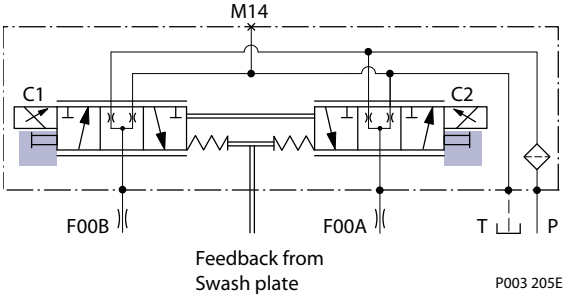

Displacement limiter

H1 pumps are designed with optional mechanical displacement (stroke) limiters factory set to max. displacement.

The maximum displacement of the pump can be set independently for forward and reverse using the two adjustment screws to mechanically limit the travel of the servo piston down to 50 % displacement. Adjustment procedures are found in the H1 pumps Service Manual.

Adjustments under operating conditions may cause leakage. The adjustment screw can be completely removed from the threaded bore if backed out to far.

Displacement limiter

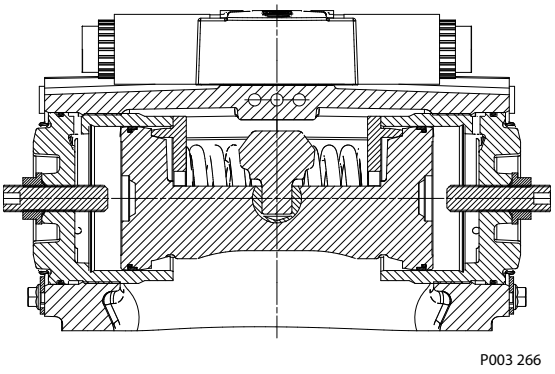

Control options

Displacement change (approximately) H1P 210/250

Size	1 Turn of displacement limiter screw		Internal wrench size	External wrench size	Torque for external hex seal lock nut	
210	9.1 cm^3	[0.56 in^3]	6 mm	22 mm	80 Nm	[708 lbf•in]
250	10.8 cm^3	[0.66 in^3]				

For more information refer to H1 pumps Service Manual 520L0848, section Displacement Limiter Adjustment.

Dimensions

Input shafts

H1P input shaft - Option G3 (SAE E, 13 teeth)

Option G3, ISO 3019-1, outer dia 44 mm-4 (SAE E, 13 teeth)

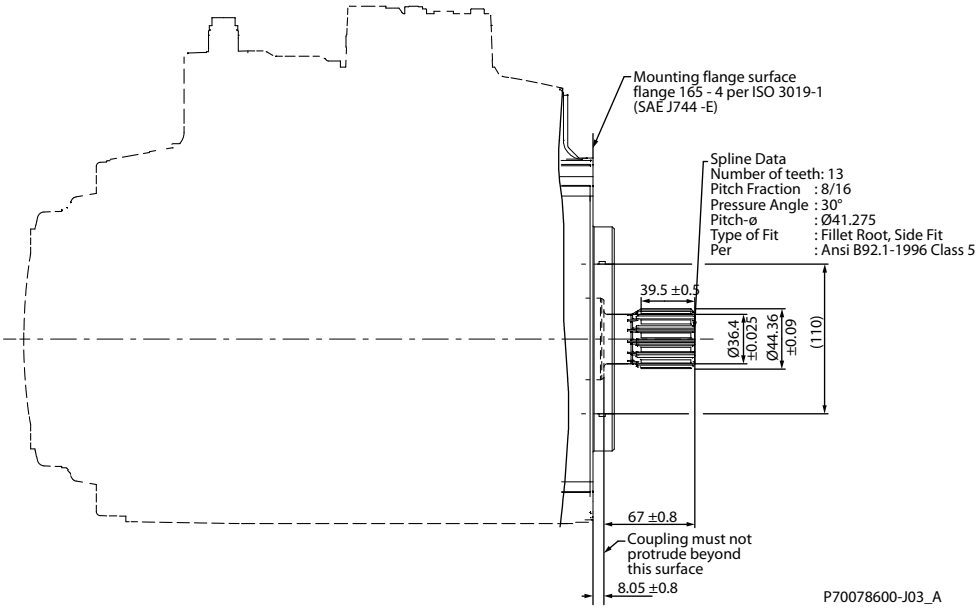

Specifications

Option	Spline	Min active spline length[2] mm [in]	Torque rating[1]	
			Rated torque Nm [lbf•in]	Maximum torque Nm [lbf•in]
G3	13 teeth, 8/16 pitch	39.5 [1.555]	1442 [12 800]	2206 [19 500]

[1)] For definitions of maximum and rated torque values, refer to: Basic Information Manual 11062168, section Shaft Torque Ratings and Spline Lubrication.
[2)] Minimum active spline length for the specified torque ratings.

Dimensions

H1P input shaft - Option G2 (SAE E, 27 teeth)

Option G2, ISO 3019-1, outer dia 44 mm-4 (SAE E, 27 teeth)

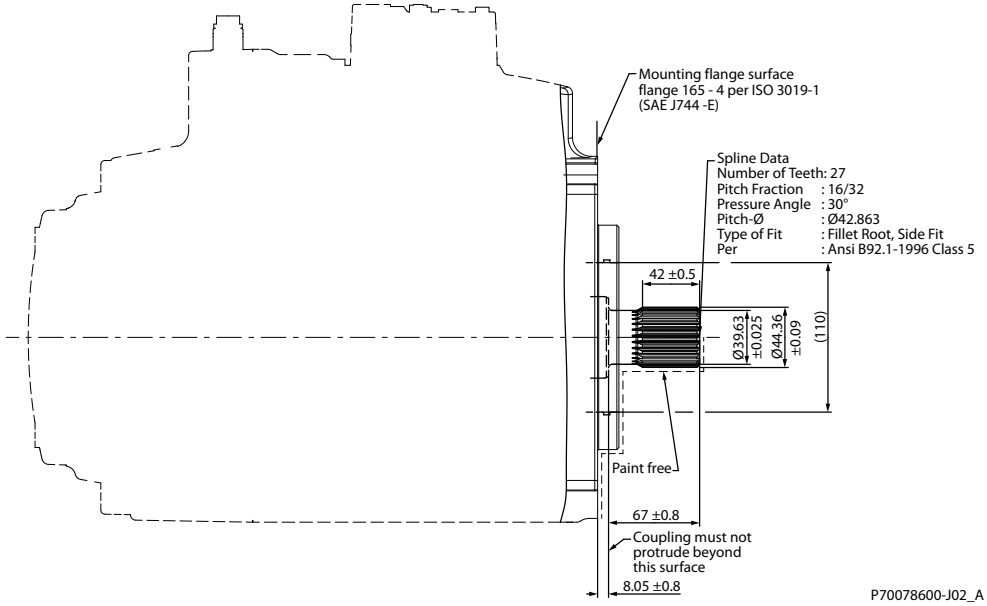

Specifications

Option	Spline	Min active spline length[2] mm [in]	Torque rating[1]	
			Rated torque Nm [lbf•in]	Maximum torque Nm [lbf•in]
G2	27 teeth, 16/32 pitch	42.0 [1.654]	1615 [14 300]	3000 [26 550]

1) For definitions of maximum and rated torque values, refer to: Basic Information Manual 11062168, section Shaft Torque Ratings and Spline Lubrication.
2) Minimum active spline length for the specified torque ratings.

Dimensions

H1P input shaft - Option F8 (SAE E, 17 teeth)

Option F8, ISO 3019-1, code 44-3, outer dia 57.15 mm-4 (SAE E, 17 teeth)

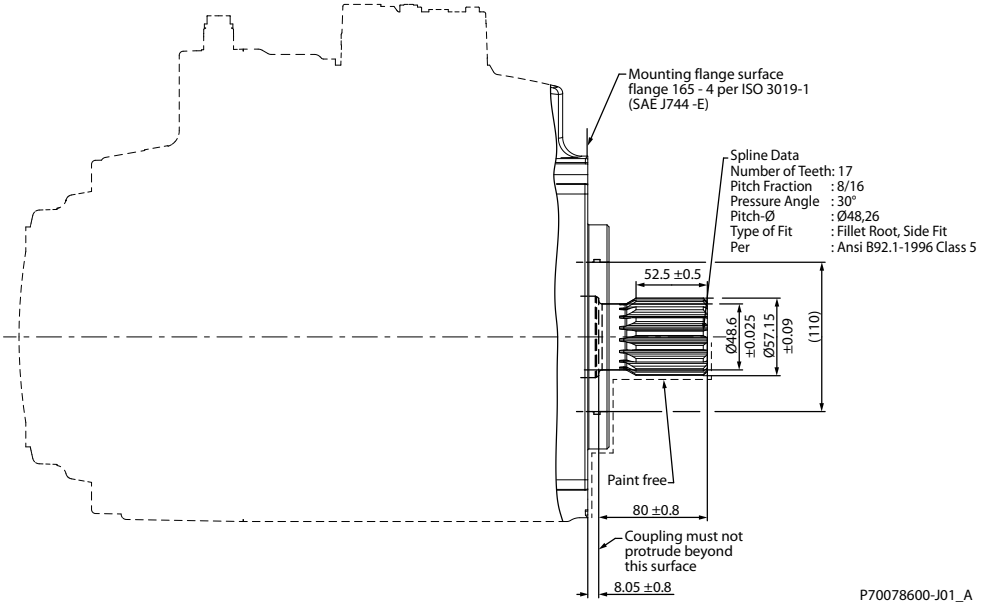

Specifications

Option	Spline	Min active spline length[2] mm [in]	Torque rating[1]	
			Rated torque Nm [lbf•in]	Maximum torque Nm [lbf•in]
F8	17 teeth, 8/16 pitch	52.5 [2.067]	3226 [28 553]	5946 [52 627]

[1] For definitions of maximum and rated torque values, refer to: Basic Information Manual 11062168, section Shaft Torque Ratings and Spline Lubrication.
[2] Minimum active spline length for the specified torque ratings.

Tapered shaft customer acknowledgement

The Danfoss H1 tapered shaft has been designed using the industry standard ISO 3019-1, minus the through-hole in the end of the shaft. Danfoss recommends a self-locking nut instead of a castle nut and pin. The nut and mating square-cut key are customer supplied.

The specified torque rating of the tapered shaft documented above is based on the cross-sectional diameter of the shaft, through the keyway, and assumes the proper clamp and fit between shaft and coupling. Danfoss guarantees the design and manufactured quality of the tapered shaft. The customer is responsible for the design and manufactured quality of the mating female coupling and key and applied torque on the nut.

Danfoss has made provisions for the key in accordance to the ISO specification with the understanding that the key is solely to assist in the installation of the mating coupling.

Caution

Torque must be transmitted by the taper fit between the shaft and it's mating coupling, not the key. Torque or loading inadvertently transmitted by the customer supplied key may lead to premature shaft failure.

Dimensions

Auxiliary mounting pads

H1P Auxiliary mounting - Option H2 (SAE A, 9 teeth)

Option H2, ISO 3019-1, flange 82-2 (SAE A, 9 teeth)

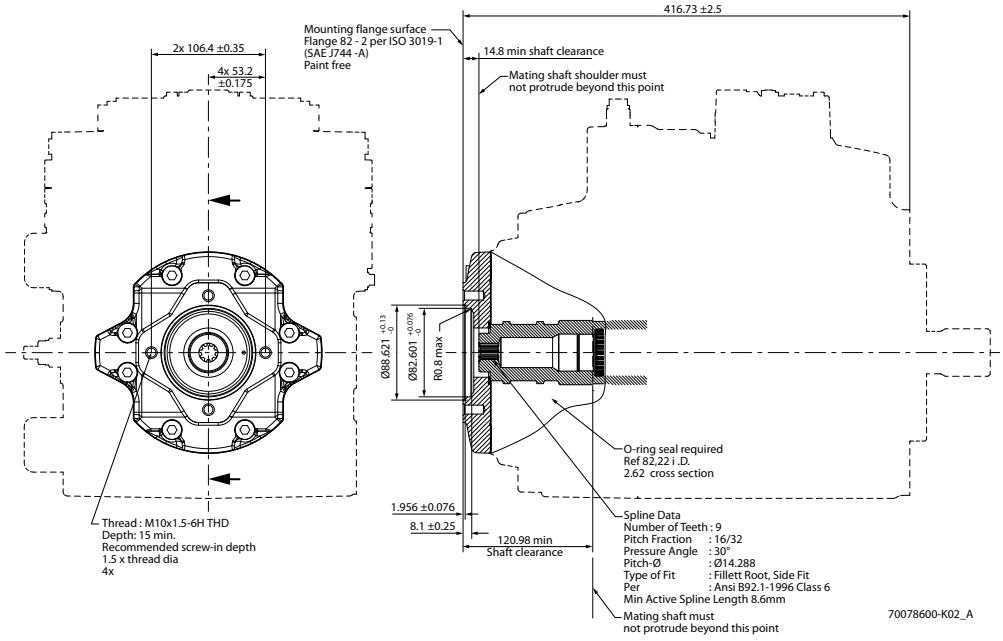

Specifications

Option	Spline	Torque rating[1] maximum torque Nm [lbf•in]
H2	9 teeth, 16/32 pitch	162 [1430]
[1] For definitions of maximum torque values, refer to: Basic Information Manual 11062168, section Shaft Torque Ratings and Spline Lubrication.		

Caution

Standard pad cover is installed only to retain coupling during shipping. Do not operate pump without an auxiliary pump or running cover installed.

Dimensions

H1P Auxiliary mounting - Option H1 (SAE A, 11 teeth)

Option H1, ISO 3019-1, flange 82-2 (SAE A, 11 teeth)

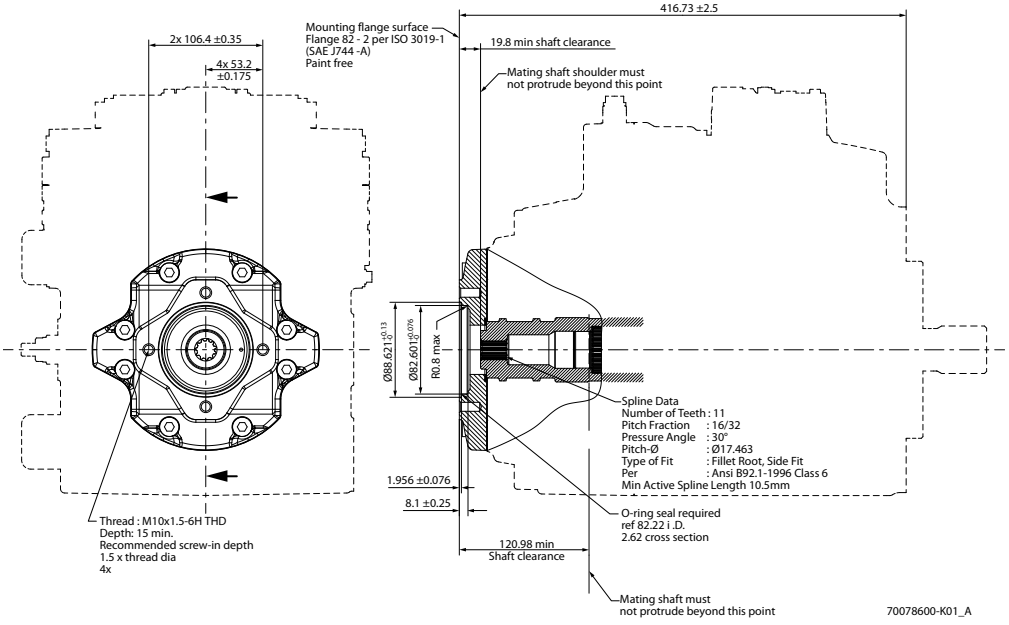

Specifications

Option	Spline	Torque rating[1] maximum torque Nm [lbf•in]
H1	11 teeth, 16/32 pitch	296 [2620]
[1] For definitions of maximum torque values, refer to: Basic Information Manual 11062168, section Shaft Torque Ratings and Spline Lubrication.		

Caution

Standard pad cover is installed only to retain coupling during shipping. Do not operate pump without an auxiliary pump or running cover installed.

Dimensions

H1P Auxiliary mounting - Option H3 (SAE B, 13 teeth)

Option H3, ISO 3019-1, flange 101-2 (SAE B, 13 teeth)

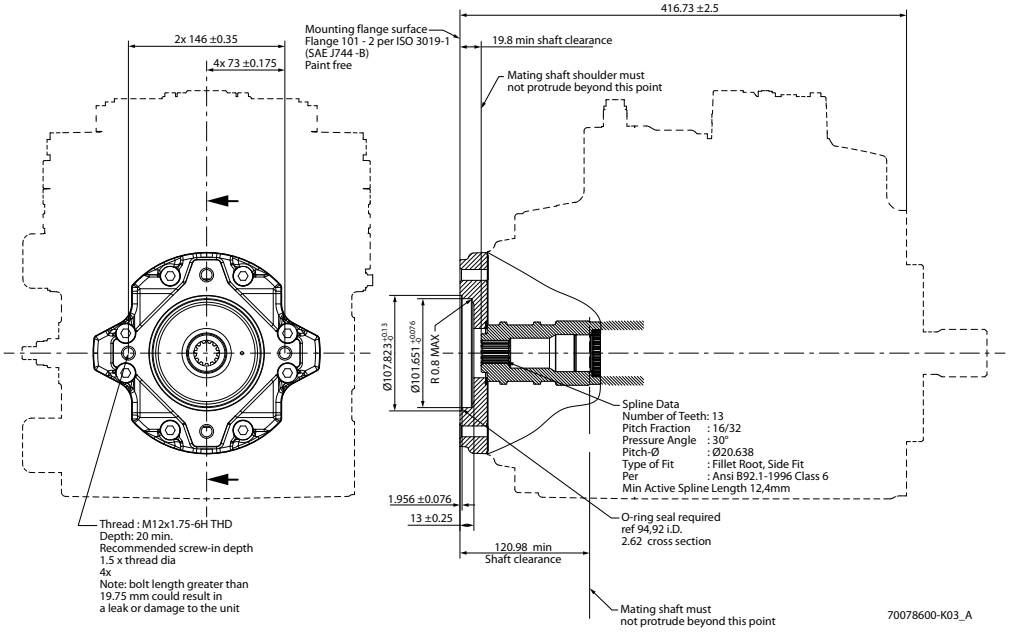

Specifications

Option	Spline	Torque rating[1] maximum torque Nm [lbf•in]
H3	13 teeth, 16/32 pitch	395 [3500]
[1] For definitions of maximum torque values, refer to: Basic Information Manual 11062168, section Shaft Torque Ratings and Spline Lubrication.		

Caution

Standard pad cover is installed only to retain coupling during shipping. Do not operate pump without an auxiliary pump or running cover installed.

Dimensions

H1P Auxiliary mounting - Option H5 (SAE B-B, 15 teeth)

Option H5, ISO 3019-1, flange 101-2 (SAE B-B, 15 teeth)

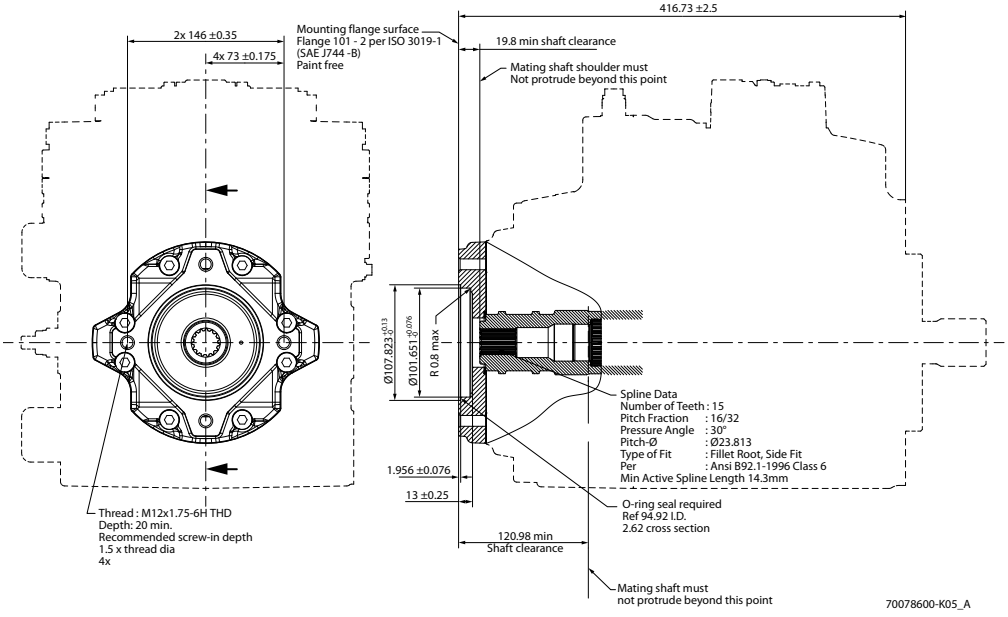

Specifications

Option	Spline	Torque rating[1] maximum torque Nm [lbf•in]
H5	15 teeth, 16/32 pitch	693 [6130]
[1] For definitions of maximum torque values, refer to: Basic Information Manual 11062168, section Shaft Torque Ratings and Spline Lubrication.		

Caution

Standard pad cover is installed only to retain coupling during shipping. Do not operate pump without an auxiliary pump or running cover installed.

Dimensions

H1P Auxiliary mounting - Option H6 (SAE C, 14 teeth)

Option H6, ISO 3019-1, flange 127-4 (SAE C, 14 teeth)

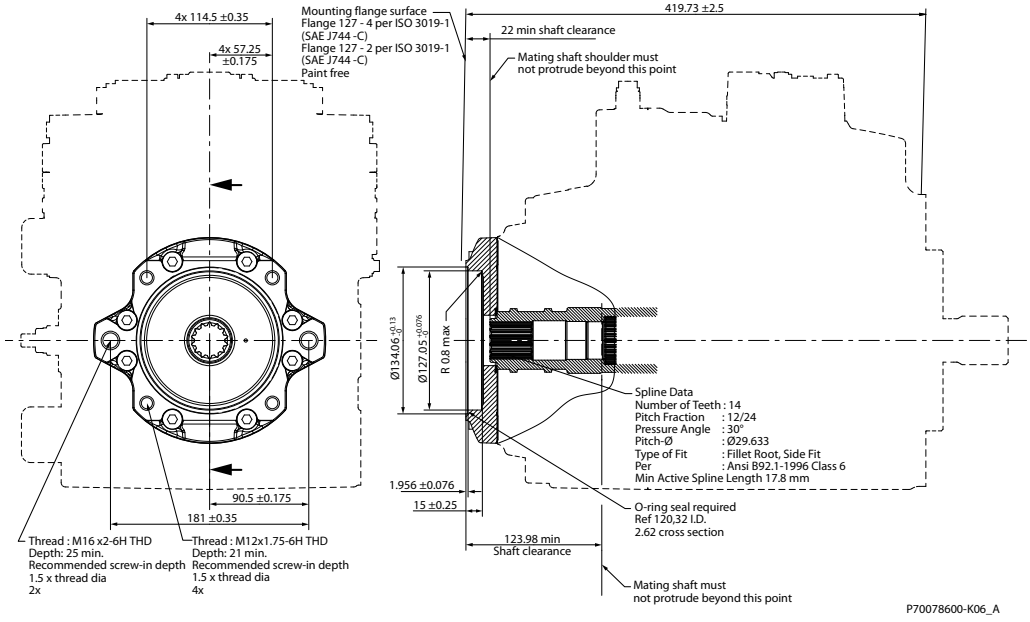

Specifications

Option	Spline	Torque rating[1] maximum torque Nm [lbf•in]
H6	14 teeth, 12/24 pitch	816 [7220]
1) For definitions of maximum torque values, refer to: Basic Information Manual 11062168, section Shaft Torque Ratings and Spline Lubrication.		

Caution

Standard pad cover is installed only to retain coupling during shipping. Do not operate pump without an auxiliary pump or running cover installed.

Dimensions

H1P Auxiliary mounting - Option H4 (SAE D, 13 teeth)

Option H4, ISO 3019-1, flange 152-4 (SAE D, 13 teeth)

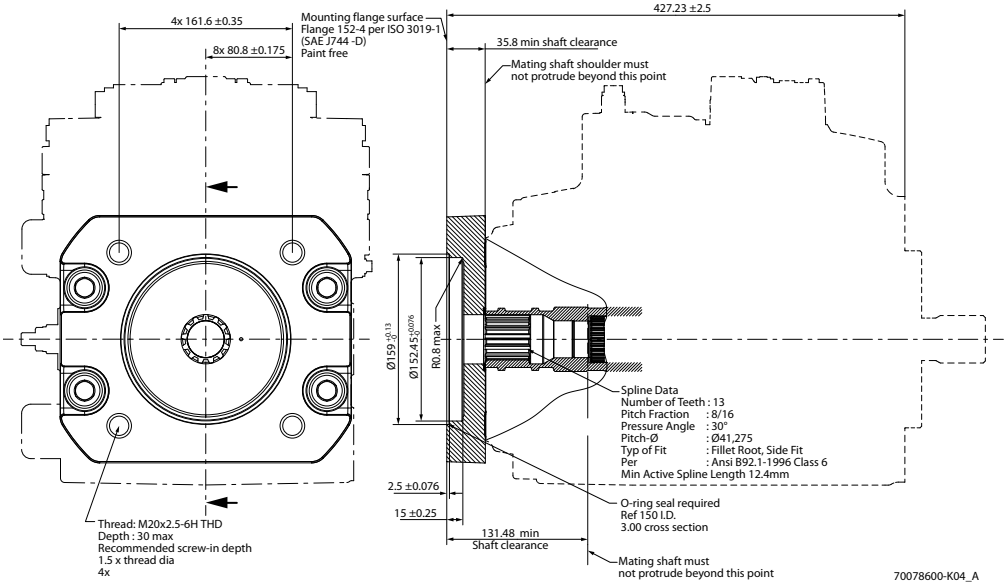

Specifications

Option	Spline	Torque rating[1] maximum torque Nm [lbf•in]
H4	13 teeth, 8/16 pitch	2206 [19 525]
1) For definitions of maximum torque values, refer to: Basic Information Manual 11062168, section Shaft Torque Ratings and Spline Lubrication.		

Caution

Standard pad cover is installed only to retain coupling during shipping. Do not operate pump without an auxiliary pump or running cover installed.

Dimensions

H1P Auxiliary mounting - Option E1 (SAE E, 13 teeth)

Option E1, ISO 3019-1, flange 177-4 (SAE E, 13 teeth)

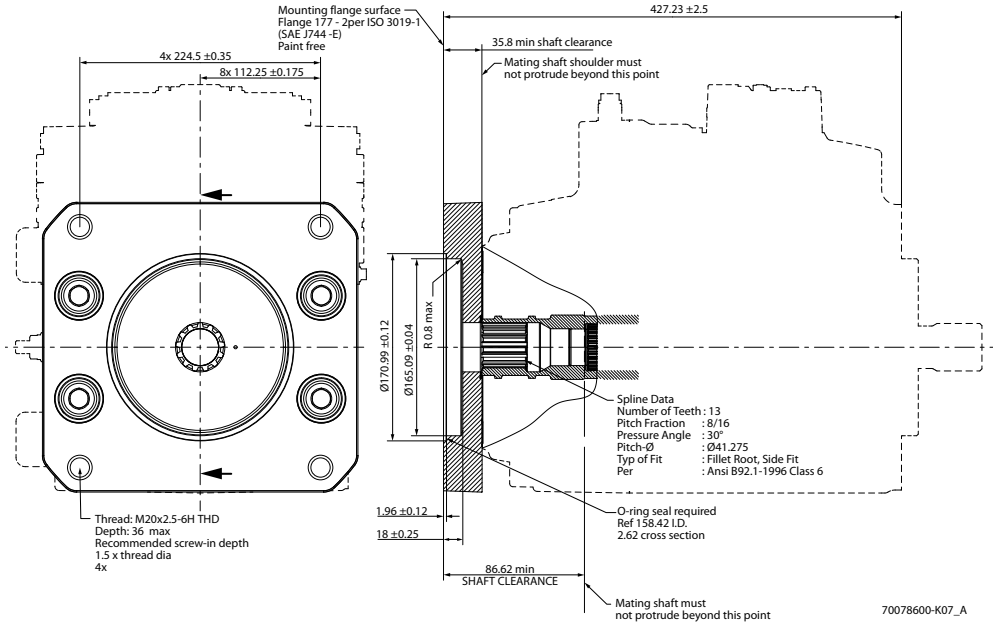

Specifications

Option	Spline	Torque rating[1] maximum torque Nm [lbf•in]
E1	13 teeth, 8/16 pitch	2206 [19 525]
[1] For definitions of maximum torque values, refer to: Basic Information Manual 11062168, section Shaft Torque Ratings and Spline Lubrication.		

Caution

Standard pad cover is installed only to retain coupling during shipping. Do not operate pump without an auxiliary pump or running cover installed.

Charge pump

Charge pump sizing/selection

In most applications a general guideline is that the charge pump displacement should be at least 10 % of the total displacement of all components in the system. Unusual application conditions may require a more detailed review of charge flow requirements. Please refer to BLN-9885, Selection of Drive line Components, for a detailed procedure.

System features and conditions which may invalidate the 10 % guideline include (but are not limited to):

- Continuous operation at low input speeds (< 1500 min-1 (rpm))
- High shock loading and/or long loop lines
- High flushing flow requirements
- Multiple Low Speed High Torque motors
- High input shaft speeds

Contact your Danfoss representative for application assistance if your application includes any of these conditions.

Charge pump flow and power curves 52 cm³ and 60 cm³

Charge pressure:	20 bar	[290 psi]		
Viscosity and temperature:	11 mm²/s	[63 SUS]	80 °C	[180 °F]

Charge pump power requirements

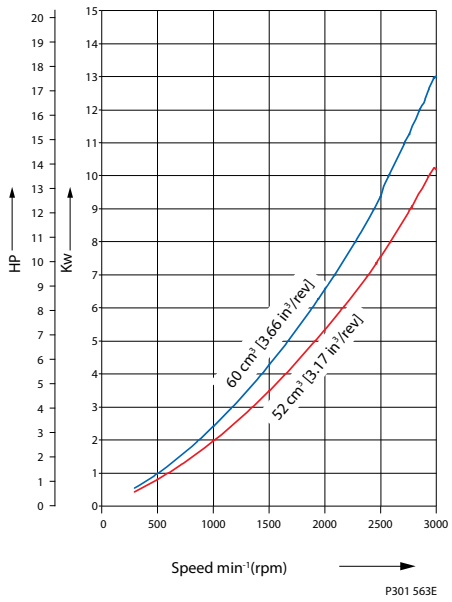

Charge pump flow

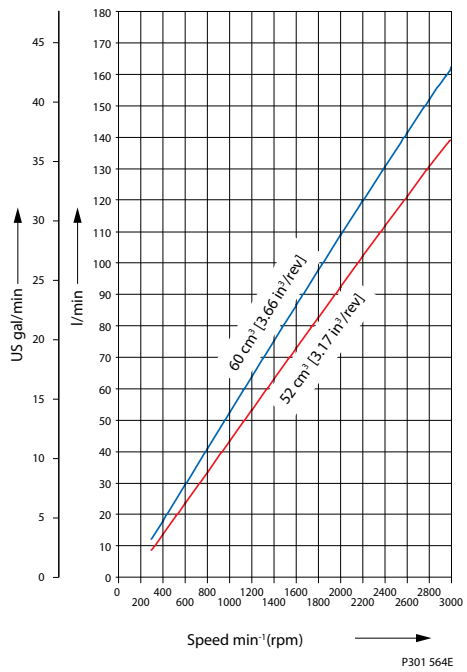

Installation drawings

Port description H1P 210/250

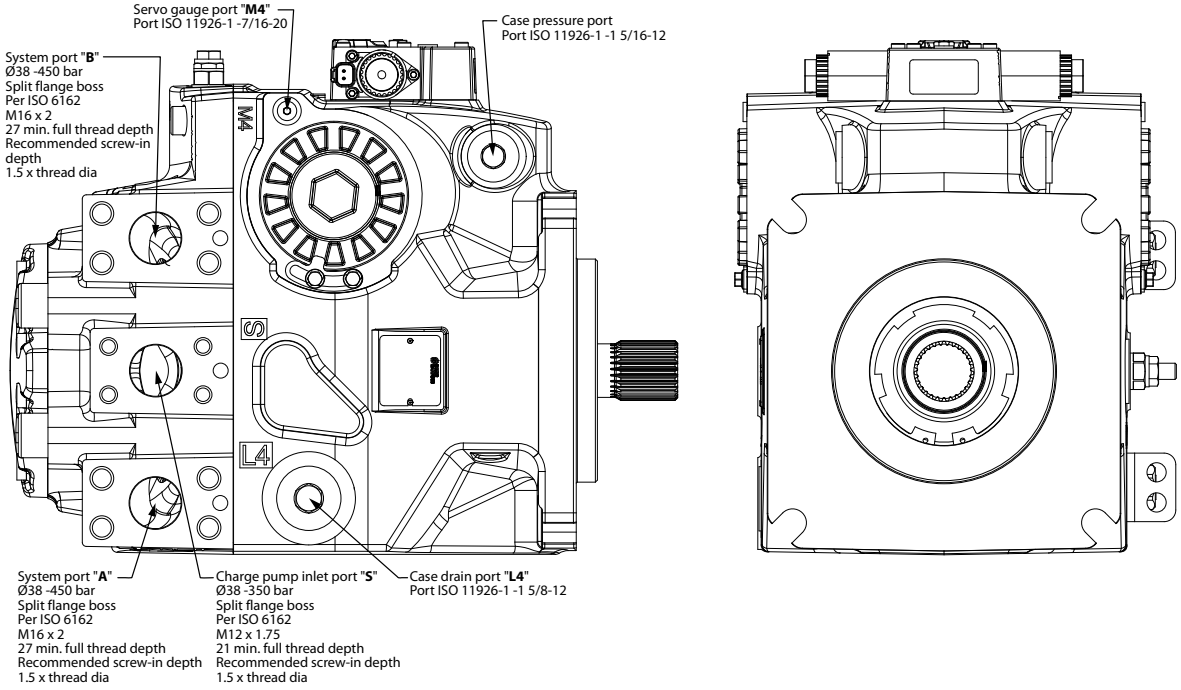

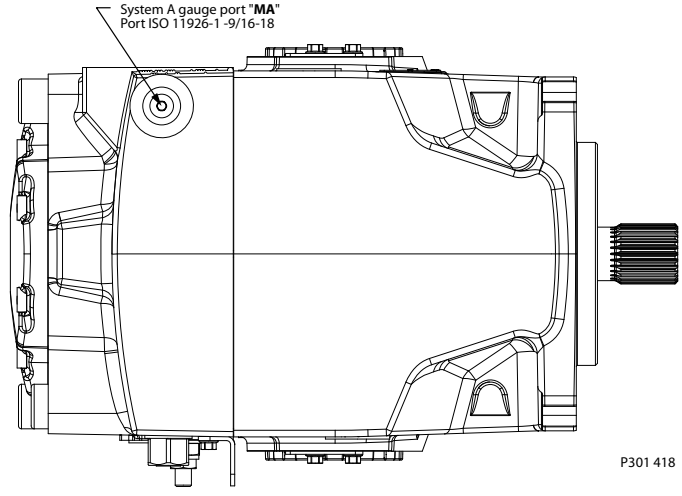

Port description

Port	Description	Sizes	Port	Description	Sizes
A	System port "A"	∅ 38	M3	Charge gauge port, after filtering	9/16 -18
B	System port "B"	∅ 38	M4	Servo gauge port	7/16 -20
E	Charge filtration port, from filter	1 1/16 -12	M5	Servo gauge port	7/16 -20
F	Charge filtration port, to filter	1 1/16 -12	M14	Case gauge port	7/16 -20
L2	Case drain port	1 5/8 -12	S	Charge inlet port	∅ 38

Installation drawings

Port description (continued)

Port	Description	Sizes	Port	Description	Sizes
L4	Case drain port	1 5/8 -12			
MA	System “A” gauge port	9/16 -18			
MB	System “B” gauge port	9/16 -18			

Please contact Danfoss for specific installation drawings

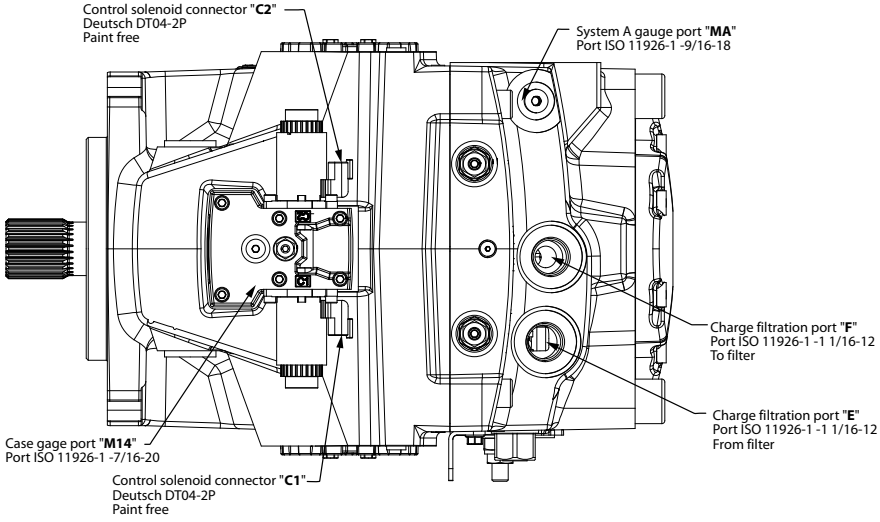

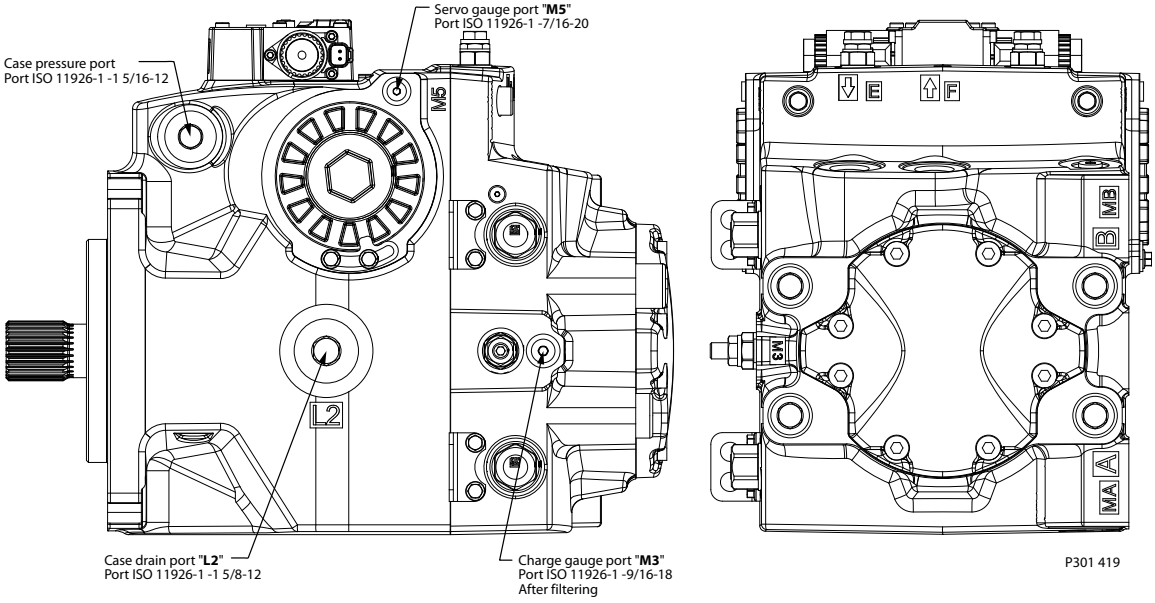

Please contact Danfoss for specific installation drawings

Installation drawings

Dimensions H1P 210/250

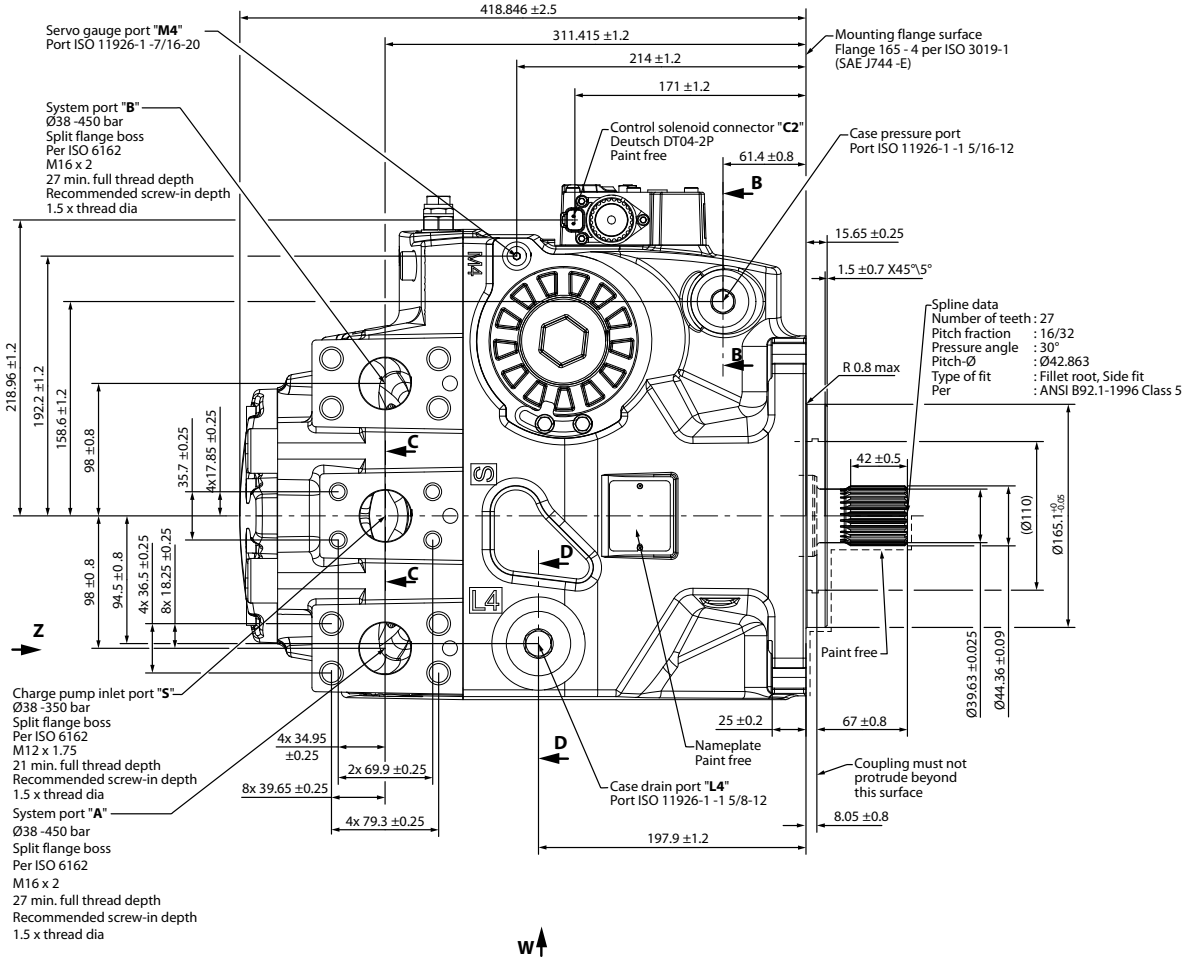

Installation drawings

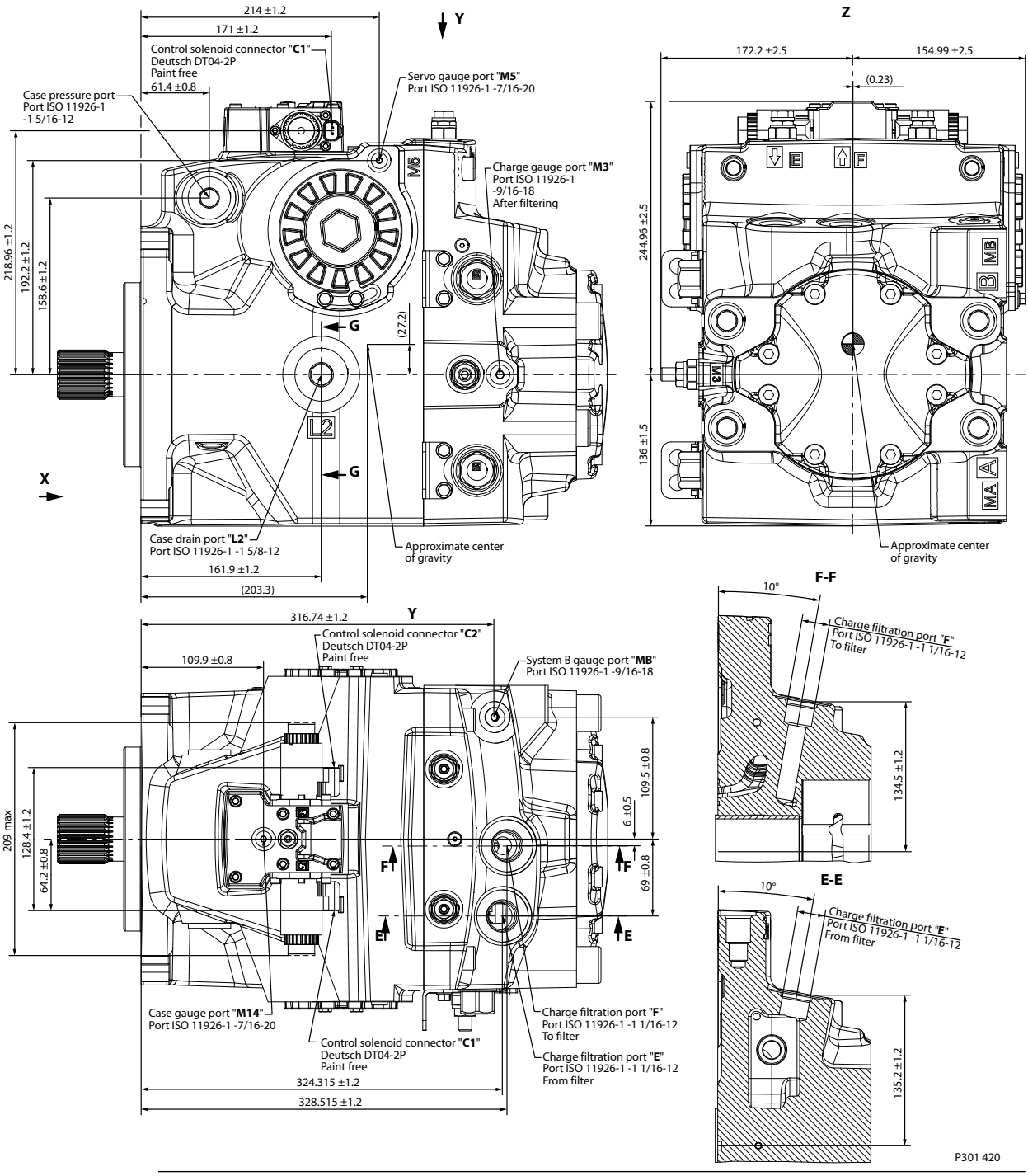

Please contact Danfoss for specific installation drawings

Installation drawings

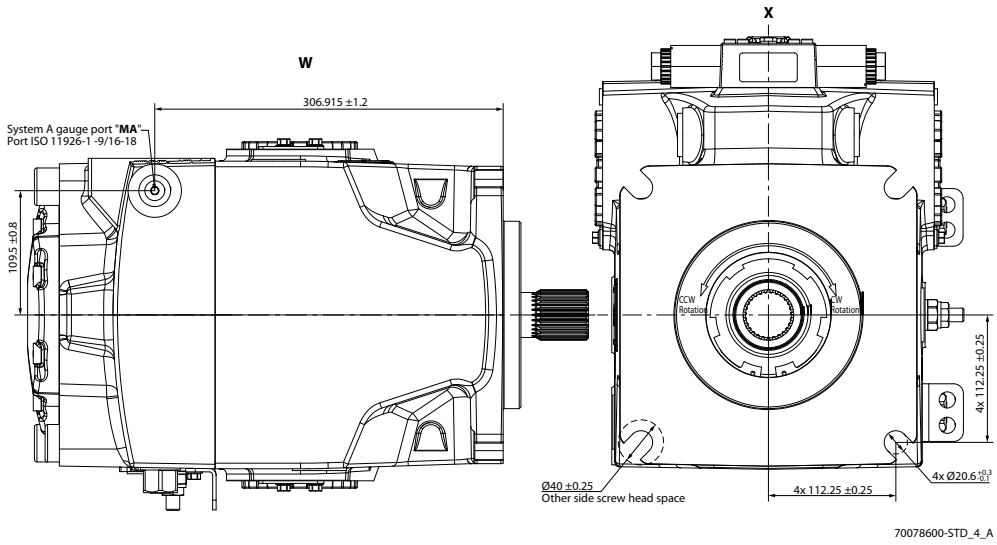

Please contact Danfoss for specific installation drawings

Controls

Electric Displacement Control (EDC), option A2 (12 V) / A3 (24 V)

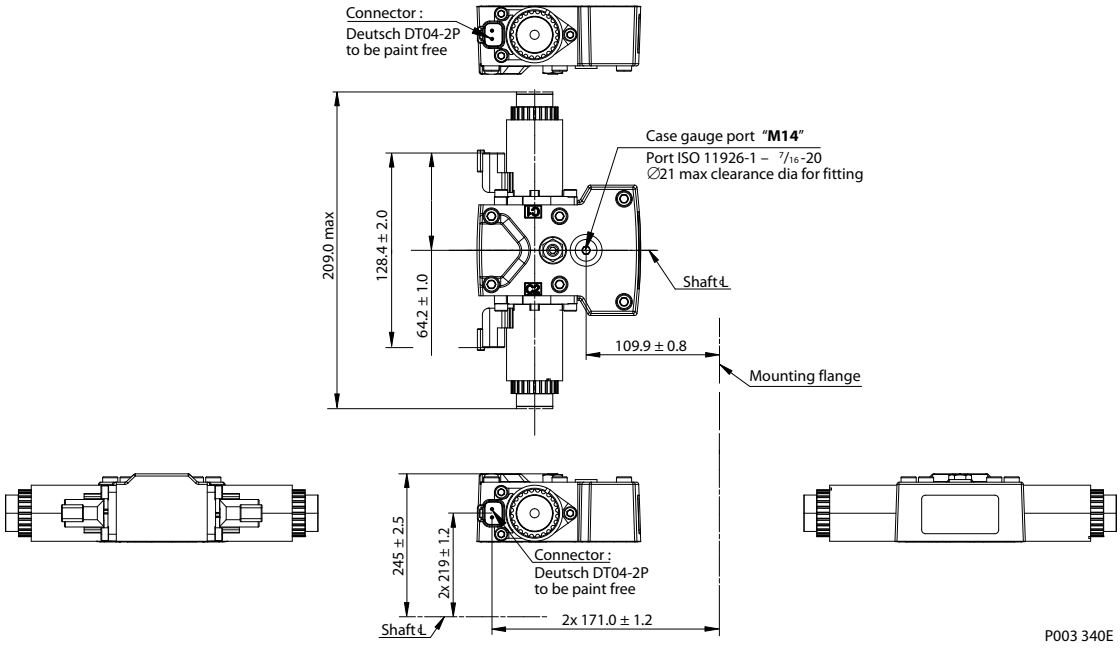

Please contact Danfoss for specific installation drawings

Electric Displacement Control (EDC) with manual override, option A4 (12 V) / A5 (24 V)

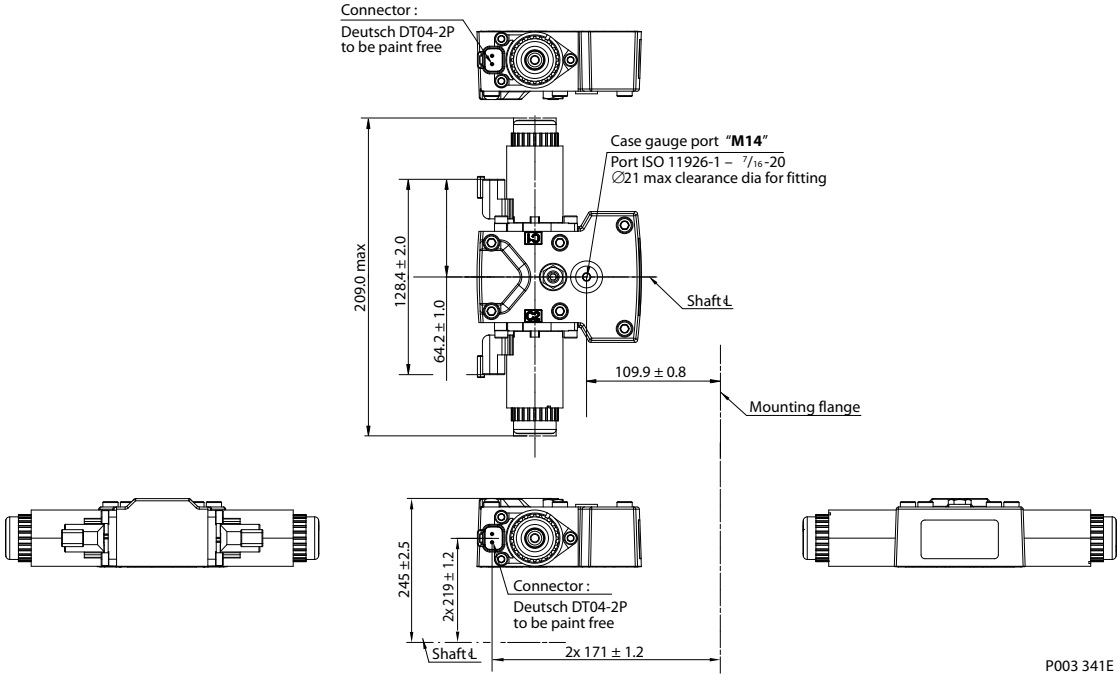

Please contact Danfoss for specific installation drawings

Displacement limiters

H1P 210/250 displacement limiter, option B

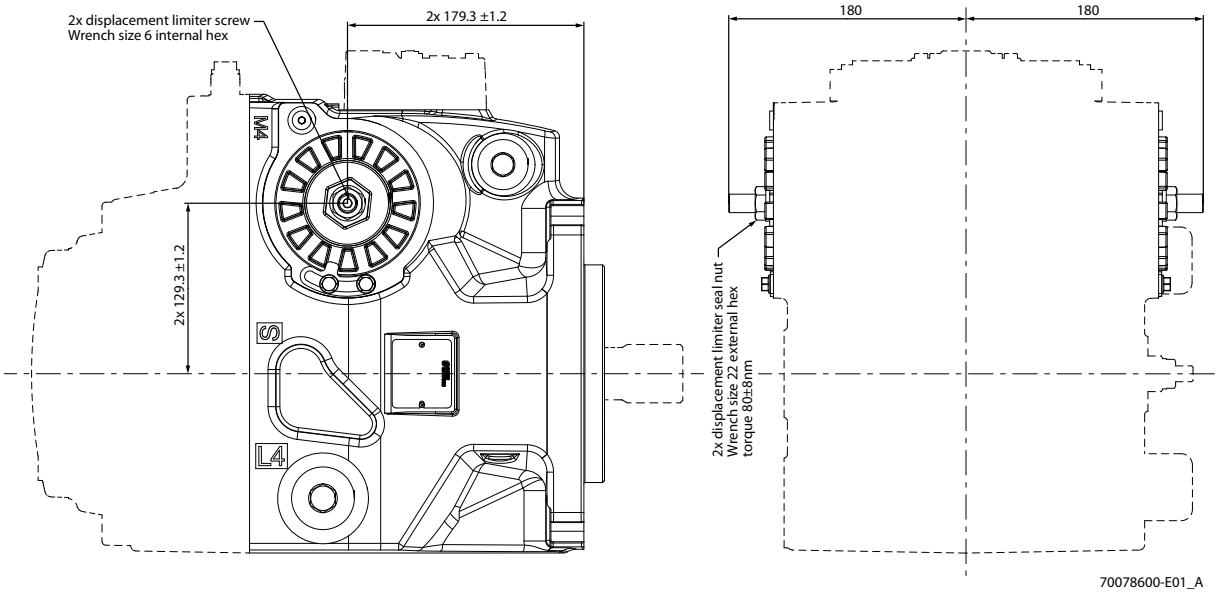

Please contact Danfoss for specific installation drawings

Filtration

H1P 210/250 suction filtration, option L

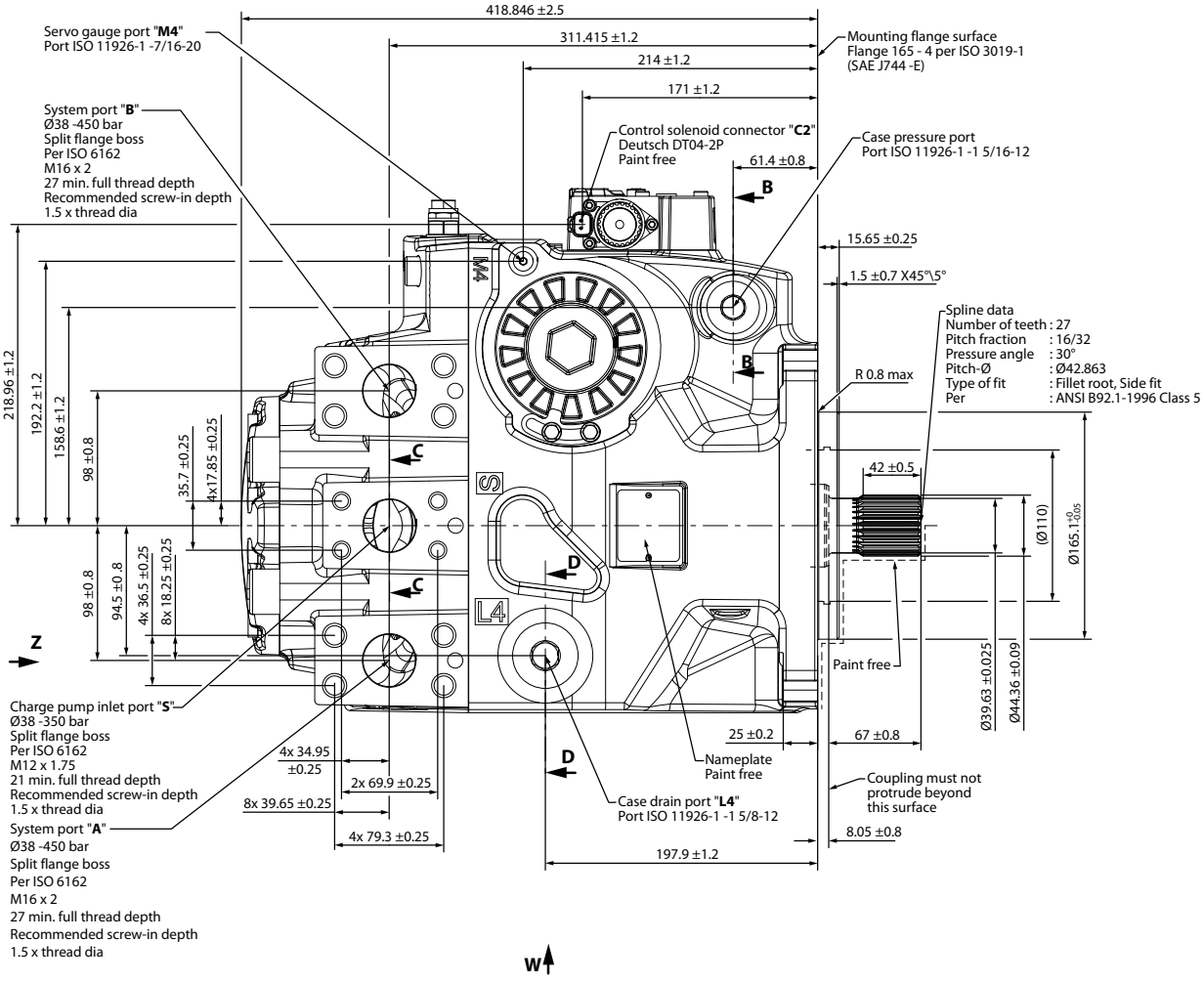

Please contact Danfoss for specific installation drawings

Products we offer:

- Bent Axis Motors
- Closed Circuit Axial Piston Pumps and Motors
- Displays
- Electrohydraulic Power Steering
- Electrohydraulics
- Hydraulic Power Steering
- Integrated Systems
- Joysticks and Control Handles
- Microcontrollers and Software
- Open Circuit Axial Piston Pumps
- Orbital Motors
- PLUS+1® GUIDE
- Proportional Valves
- Sensors
- Steering
- Transit Mixer Drives

Danfoss Power Solutions is a global manufacturer and supplier of high-quality hydraulic and electronic components. We specialize in providing state-of-the-art technology and solutions that excel in the harsh operating conditions of the mobile off-highway market. Building on our extensive applications expertise, we work closely with our customers to ensure exceptional performance for a broad range of off-highway vehicles.

We help OEMs around the world speed up system development, reduce costs and bring vehicles to market faster.
Danfoss – Your Strongest Partner in Mobile Hydraulics.

Go to www.powersolutions.danfoss.com for further product information.

Wherever off-highway vehicles are at work, so is Danfoss.

We offer expert worldwide support for our customers, ensuring the best possible solutions for outstanding performance. And with an extensive network of Global Service Partners, we also provide comprehensive global service for all of our components.

Please contact the Danfoss Power Solution representative nearest you.

Comatrol
www.comatrol.com

Schwarzmüller-Inverter
www.schwarzmueller-inverter.com

Turolla
www.turollaocg.com

Valmova
www.valmova.com

Hydro-Gear
www.hydro-gear.com

Daikin-Sauer-Danfoss
www.daikin-sauer-danfoss.com

Local address:

Danfoss
Power Solutions US Company
2800 East 13th Street
Ames, IA 50010, USA
Phone: +1 515 239 6000

Danfoss
Power Solutions GmbH & Co. OHG
Krokamp 35
D-24539 Neumünster, Germany
Phone: +49 4321 871 0

Danfoss
Power Solutions ApS
Nordborgvej 81
DK-6430 Nordborg, Denmark
Phone: +45 7488 2222

Danfoss
Power Solutions
(Shanghai) Co. Ltd.
Building #22, No. 1000 Jin Hai Rd
Jin Qiao, Pudong New District
Shanghai, China 201206
Phone: +86 21 3418 5200